MARK	PC.DET.	QTY	STEEL SHAPE	DESCRIPTION / 1ST DIMENSION	2ND DIM	LENGTH	REMARKS	WT	SF
SVI-4x12-B		**1**		**VENT INSERT 4x12**				**0.78**	**0.7**
	pa	1	PL	0.25	4	12		0.78	0.70

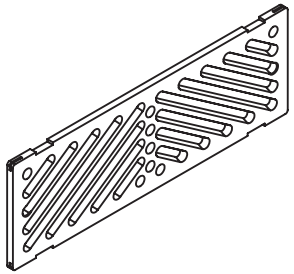

ISOMETRIC VIEW

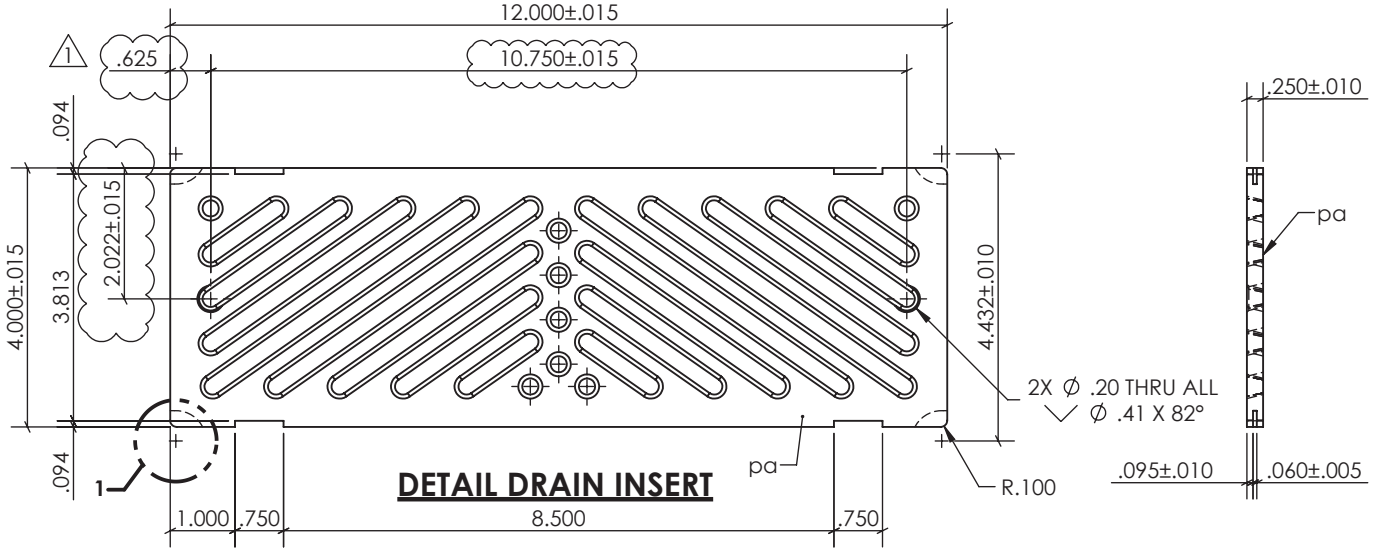

DETAIL DRAIN INSERT

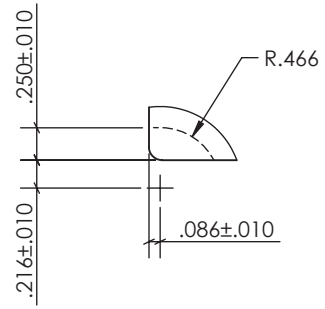

DETAIL 1 / -

SCALE:1:1

PROTECTED BY: All Rights Reserved — PATENT, LICENSING, COPYRIGHT, TRADEMARK

FABRICATION TOLERANCES: (UNLESS NOTED)

NO.	DATE	REVISION	BY
0	7/01/19	ISSUED FOR FABRICATION	db
1	7/11/2019	REVISED HOLE LOCATION	db

DESCRIPTION: DETAIL DRAIN INSERT

DRAWN BY: Don Benkowski	DATE: 05/01/19	SCALE: 6"=1'-0"
CHECKED BY:	DATE:	JOB NO.:
DWG NO.: SVI-4x12-B V2.0	SHEET NO.: 1 OF 1	REV.: 1