MARK	PC.DET.	QTY	STEEL SHAPE	DESCRIPTION / 1ST DIMENSION	2ND DIM	LENGTH	REMARKS	WT	SF
VB-4x10 R1		**1**		**VENT BRACKET 4x10 R1**				**0.51**	**0.69**
	pa	1	PL	0.5	6	12		0.51	0.69

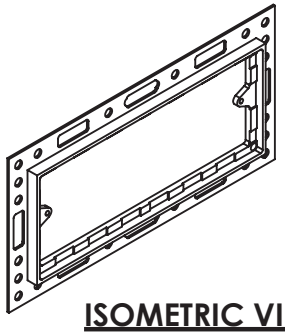

ISOMETRIC VIEW

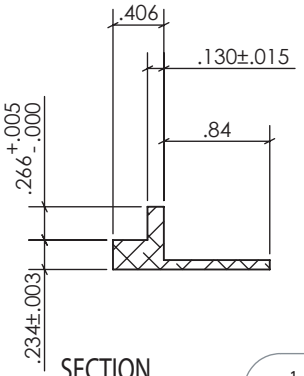

SECTION 1

SCALE:1:1

(TYPICAL EACH SIDE)

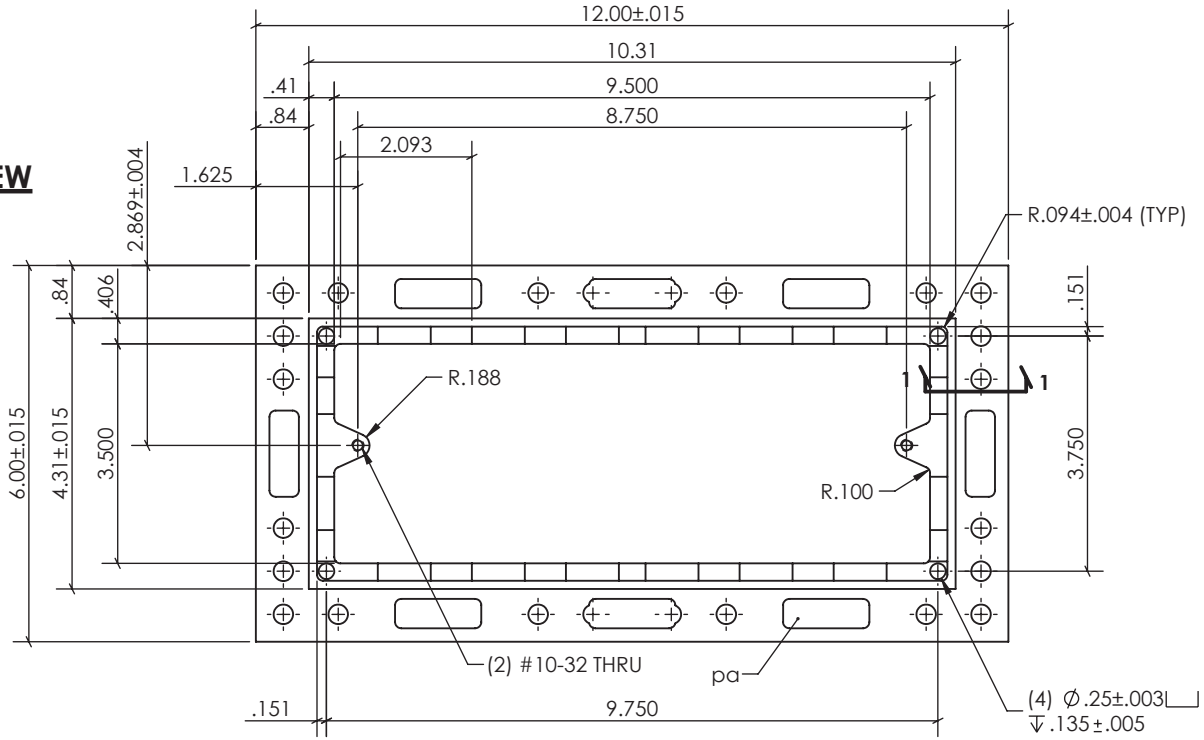

DETAIL: VB-4x10 R1

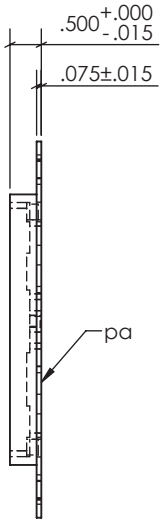

PROTECTED BY: All Rights Reserved
PATENT
LICENSING
COPYRIGHT
TRADEMARK

NO.	DATE	REVISION	BY
0	07/15/20	ISSUED FOR FABRICATION	db

FABRICATION TOLERANCES: (UNLESS NOTED)

DESCRIPTION: DETAIL VENT BRACKET 4x10 REV 1

DRAWN BY: Don Benkowski	DATE: 07/15/20	SCALE: 6"=1'-0"
CHECKED BY:	DATE:	JOB NO.:
DWG NO.: VB-4x10 REV 1	SHEET NO.: 1 OF 1	REV.: 3